5. Exploded View

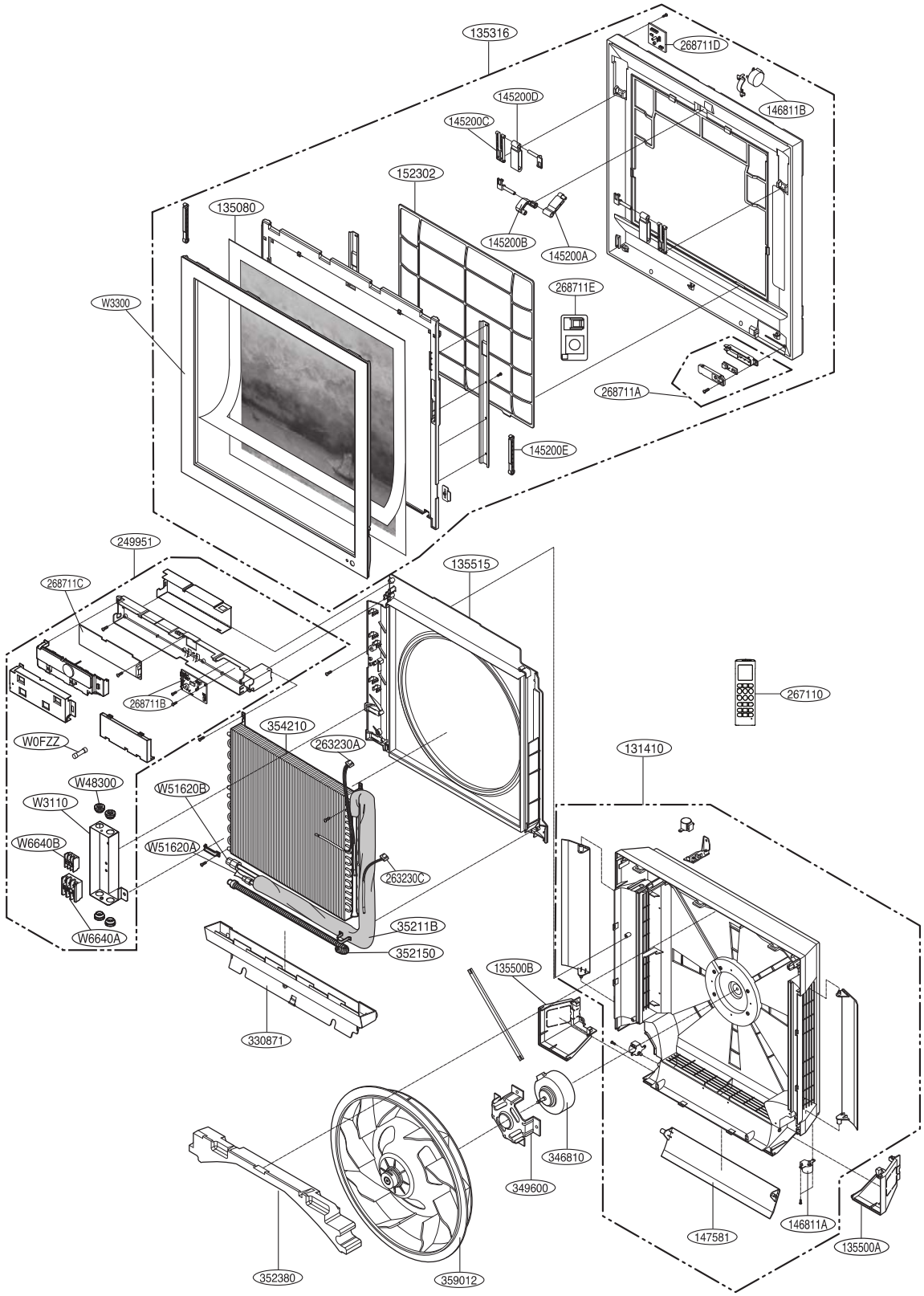

Note) * Please ensure GCSC since the replacement parts may be changed depending upon the buyer's request.
Please check the correct parts in View RPL(Replacement Part List) on GCSC.
(GCSC Website http://biz.Lgservice.com,)

Copyright ©2016 LG Electronics. Inc. All right reserved.
Only for training and service purposes

LGE Internal Use Only